(Use 1A fuse fore each of these supply on the slot 9 board)

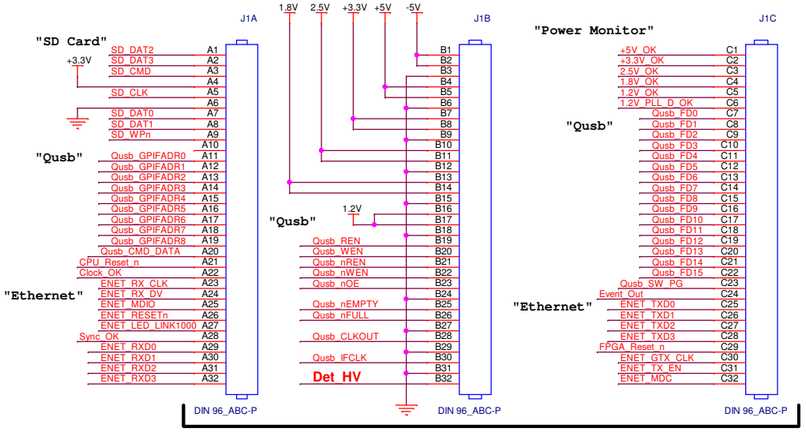


## Host PC Interface Board Connector (Slot 10)

Det_ HV MAXIMUM is 100V

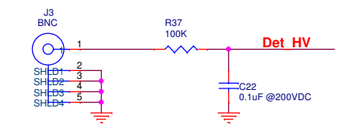


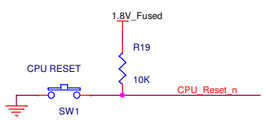

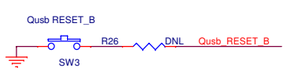


### FPGA & DDR PS Monitor (These signals driving from I/O FPGA 3.3V Bank 4)

Use 3 double high LED

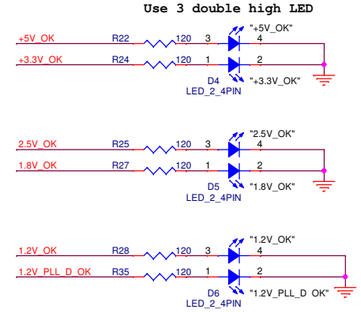


### Monitor Signals (These signals driving from MAIN FPGA 2.5V Bank 6)

Use 2 double high LED

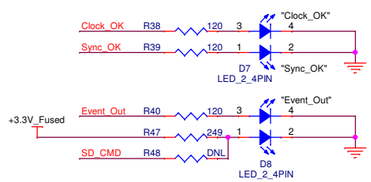


## Board Power Fuses

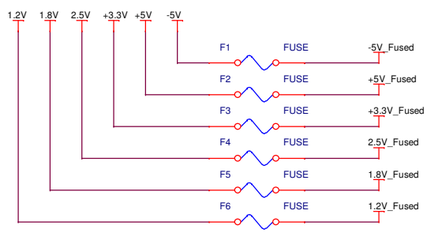


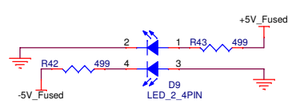


Use 1 double high LED

## 10/100/1000 Ethernet

Added R45 & R46 (3-29-11)

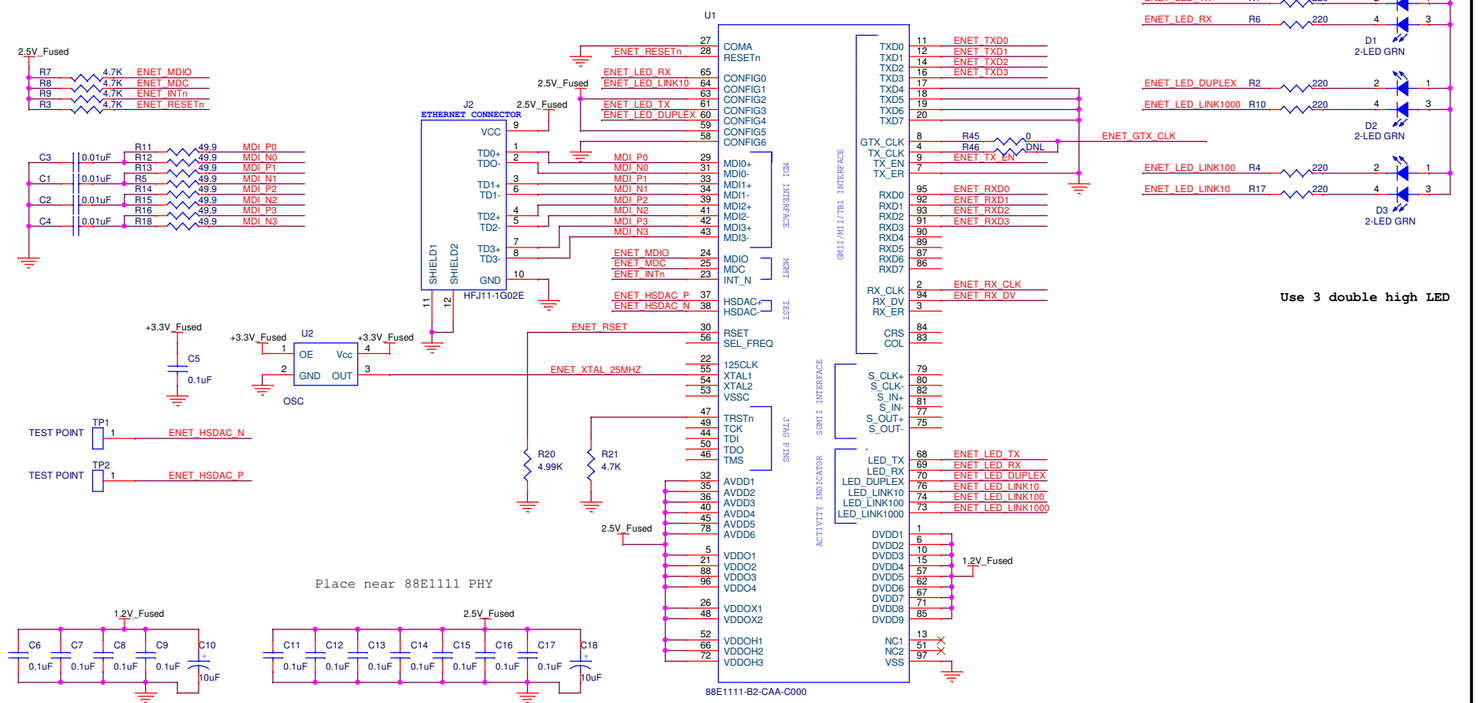


## QuickUSB INTERFACE

This is the 80 pins HIROSE S.M connector (1.25" x 0.25").
(This Connector will be placed close to the Host PC Interface VME connector).
NOTE: There are 2 options for Plug-in the QuickUSB Module: EITHER plug-in THIS connector OR plug-in the SB board.

When "Qusb 5V" is "ON", USB connection is established

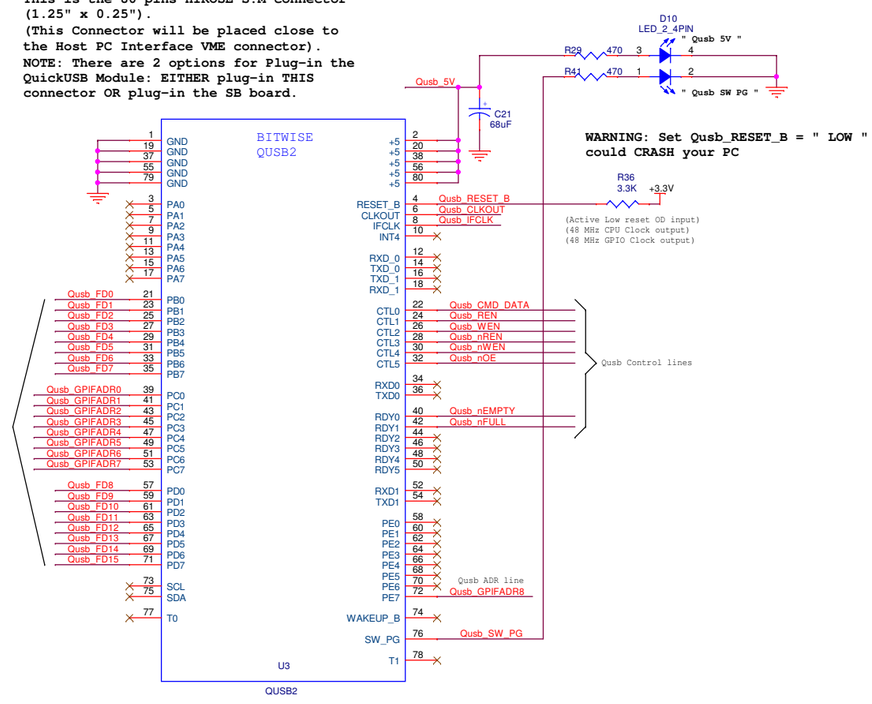


WARNING: Set Qusb_RESET_B = " LOW " could CRASH your PC

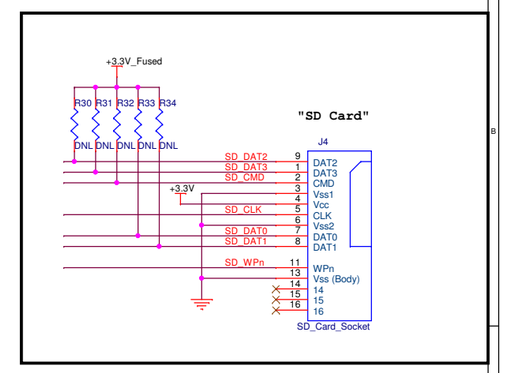


Rev 1 = Removed J5, J6 and R44.
Changed all footprints on dual leds to LED_PANEL_RA_VT/W.170/L.320/040.
Moved U3 to front panel and moved leds.
Added R47 & R48 to unused led on D8.
Changed HV BNC symbol to show 5 pins.

C:\USERS\SENG\DOCUMENTS\ORCAD\OPENPET\SLOT 10-FAB FILES-1\OPENPET SB-SLOT10 BD-REV1-FAB FILES-2014-01-10

| | |
|---|---|
| Revisions: | LBNL<br>Electronics Engineering Division<br>One Cyclotron Road<br>Berkeley, California 94720 |
| Engineer: Chinh Vu | Title: Host PC INTERFACE |
| Designer: Judy Stirkkinen | Project: OPENPET- SB |
| DWG NO.: <Doc> | Size D · Modify Date: Monday, December 02, 2013 · Sheet 1 of 1 · Rev 1 |

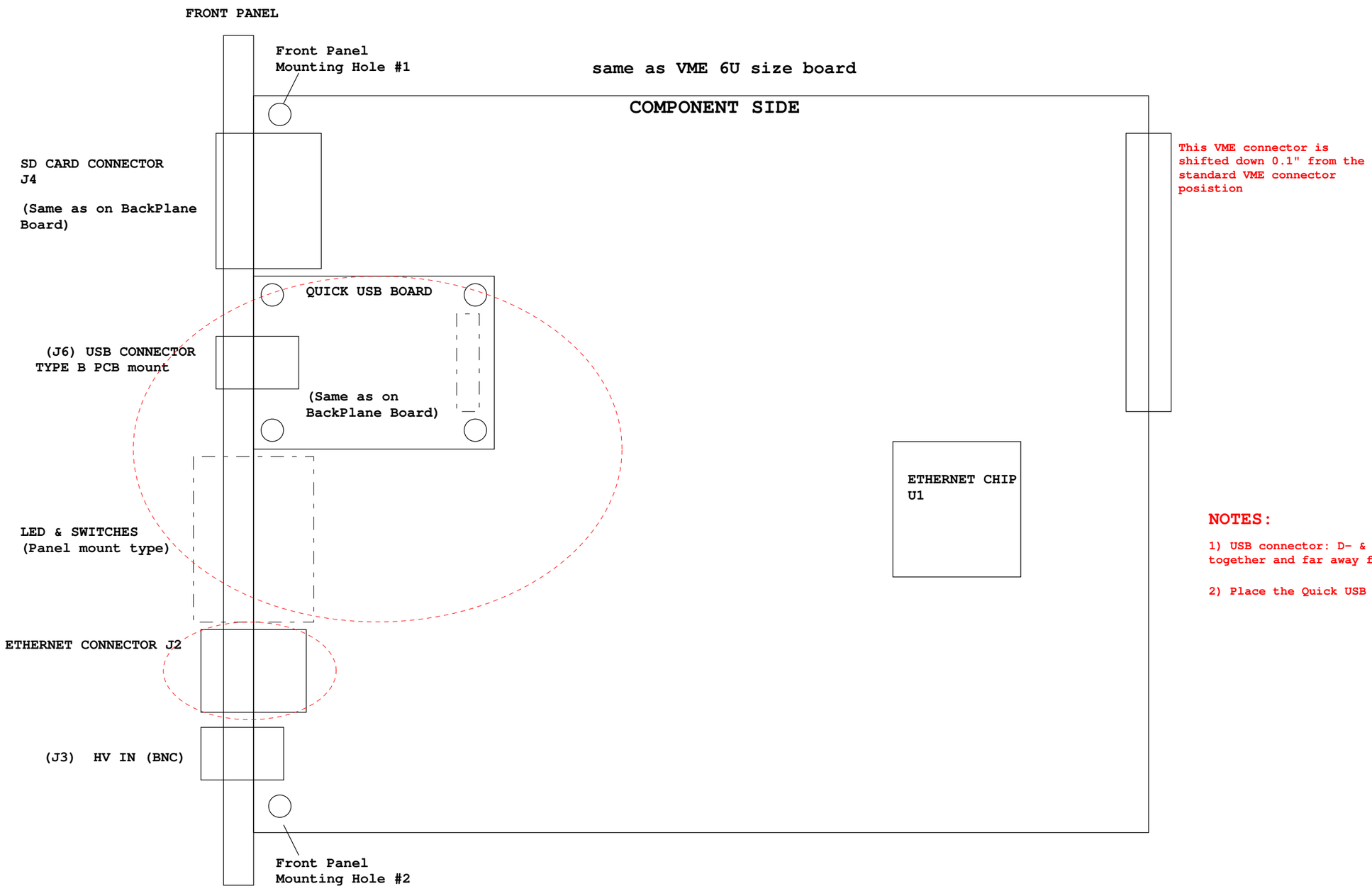


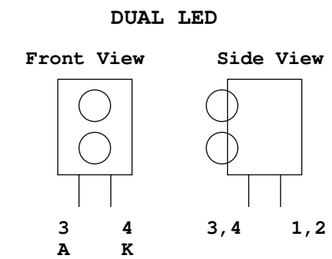


## NOTES:

1) USB connector: D- & D+ are High speed signals, should run together and far away from other

2) Place the Quick USB and Ethernet chip U1 close to the VME connector

| | |
|---|---|
| Revisions: | LBNL<br>Electronics Engineering Division<br>One Cyclotron Road<br>Berkeley, California 94720 |
| | C:\ORCAD_LBL_PROJECTS\OPENPET\SLOTS_9_12_BOARDS\OPENPET_SB_SLOT_10_HOST_ |
| Engineer: Chinh Vu | Title: Host PC INTERFACE- BOARD ALYOUT |
| Designer: Judy Stirkkinen | Project: OPENPET- SB |
| DWG NO.: <Doc> | Size C · Modify Date: Thursday, October 03, 2013 · Sheet 1 of 1 · Rev 0 |